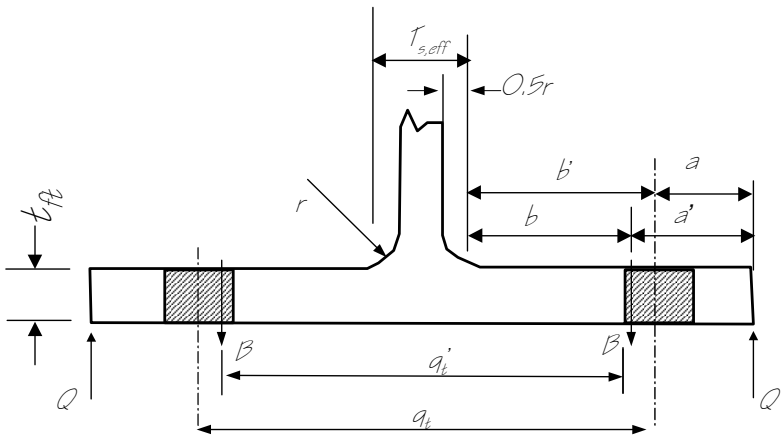

Figure 3-21 Geometry for Prying Forces and Bending of T-Section Flanges

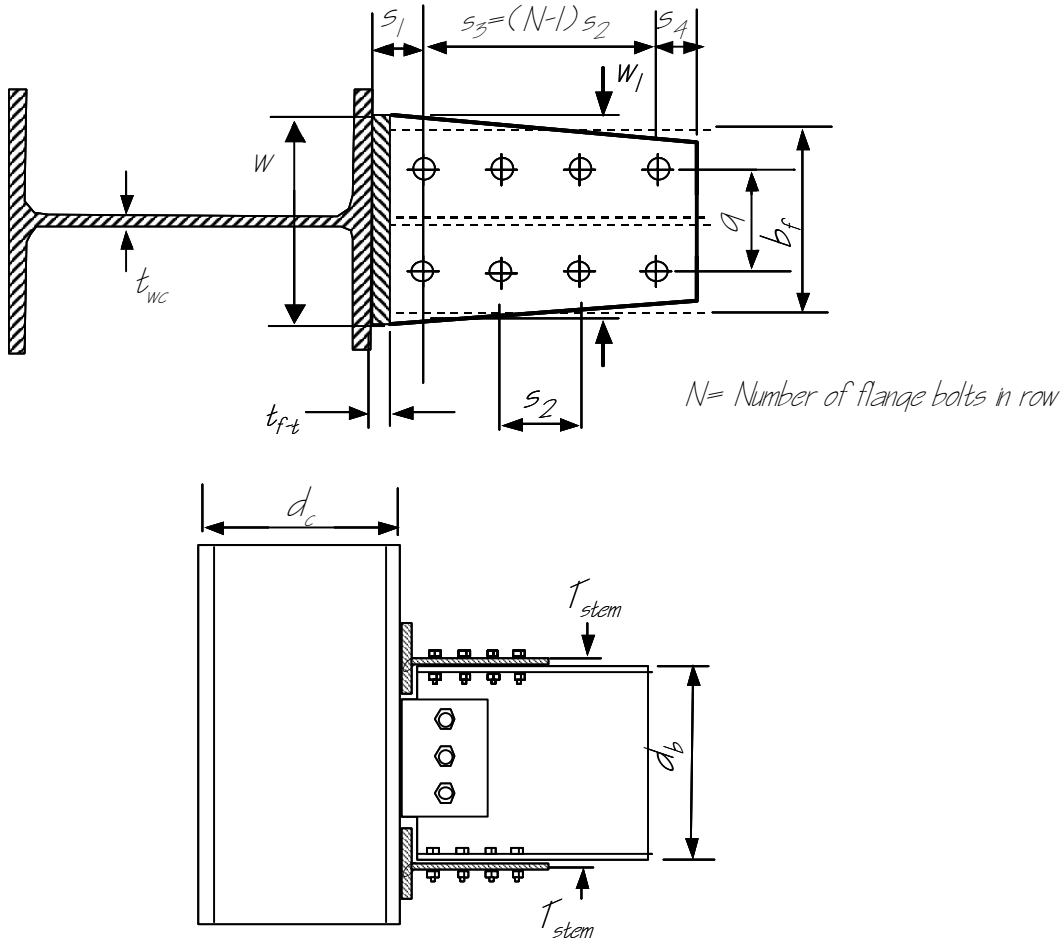

Figure 3-22 Geometry for Other T-Stub Failure Modes