Lifetime Cost Analysis of Slender Bridges due to Flutter Occurrence Using the Data of the "United States - Japan Benchmark Study on Flutter Derivatives"

by

Dong-Woo Seo[1], Luca Caracoglia[2]

ABSTRACT

Aeroelastic coefficients of bridge decks (flutter derivatives) are fundamental for the assessment of bridge response to wind loading. Flutter derivatives are routinely extracted from wind tunnel section-model experiments. The results of the "United States - Japan Benchmark Study on Flutter Derivatives", completed a few year ago, emphasized the relevance of experimental errors in the extraction of flutter derivatives from wind tunnel tests. Some of the experimental data and results from the US-Japan study are used in this paper to estimate the occurrence of flutter on two simulated bridge examples and to project the flutter probability on the expected "lifetime costs" for a full-scale structure. This analysis is carried out numerically. The simulations employ a recently-proposed framework for cost analysis on long-span bridges, induced by damages caused by high winds.

Estimation of torsional-flutter probability is based on a scalar function with random coefficients in terms of mean wind speed, the roots of which correspond to the critical flutter velocity, developed in recent years by the authors. This probability is used, together with information on the probability of wind velocity at a given site, to predict the expected value of the lifetime cost due to flutter occurrence, using Monte-Carlo methods.

KEYWORDS: long-span bridges, wind loading, aeroelasticity, torsional flutter probability, "lifetime cost analysis".

1.0 INTRODUCTION

Flutter instability is of relevant to the design of long-span bridges since it can lead to structural failure. Flutter instability can be predicted by analyzing the aeroelastic coefficients of bridge decks or flutter derivatives (Scanlan and Tomko, 1971). These are routinely extracted from section model tests in wind tunnel. As outlined by the recent results of the "US-Japan Benchmark Study on Flutter Derivatives" (Sarkar et. al, 2009; Caracoglia et al. 2009) experimental errors in the wind tunnel cannot be neglected. Recently, other investigators have emphasized the same problem and proposed a procedure for "error analysis" in wind tunnel (e.g., (Mannini and Bartoli, 2012)). As a result, even though structural reliability analysis against flutter, influenced by various error sources, is routinely carried out (Dragomirescu et al., 2003), a probabilistic analysis which rigorously account for measurement error sources in wind tunnel tests is still needed.

The focus of this study is on torsional flutter (e.g., Simiu and Scanlan, 1996), which is a common aeroelastic instability mechanism for many long-span bridges. This phenomenon corresponds to a torsionally-driven unstable motion of the deck (Simiu and Scanlan, 1996); it is mainly associated with the diverging deck vibration in the fundamental torsional structural mode, which appears beyond a certain wind speed threshold, the critical flutter velocity.

An approach for the derivation of the

[1] PhD Student, Department of Civil and Environmental Engineering, Northeastern University, 400 Snell Engineering Center, 360 Huntington Avenue, Boston, MA 02115 USA

[2] Associate Professor, Department of Civil and Environmental Engineering, Northeastern University, 400 Snell Engineering Center, 360 Huntington Avenue, Boston, MA 02115 USA

torsional-flutter probability (TFP) for long-span bridges with moderate to highly bluff decks was recently investigated by the authors (Seo and Caracoglia, 2011). The approach makes use of an analytically-based and numerically-implemented algorithm for the solution of the critical wind velocity, which can be applied to both deterministic and probabilistic problems. This procedure models a selected group of flutter derivative curves using a second-order polynomial model as a function of the reduced velocity. These "model curves" enable the derivation of a scalar expression, from which the critical flutter velocity can be determined in simple form.

In this study, a probabilistic analysis is initially carried out by Monte Carlo methods to determine the TFP of two simulated bridge examples. The data of the US-Japan study on flutter derivatives corresponding to a rectangular box with width-to-depth aspect ratio 2:1 are used to simulate the aeroelastic behavior of a "bluff deck". The statistical properties (mean, variances) of the coefficients of the "model curves" are indirectly estimated from the data.

The TFP is later used, together with information on the probability of the wind velocity at a given site, to predict the expected lifetime (repair) costs on a full-scale structure, accounting for the collapse due to the onset of flutter. A similar study on torsional flutter instability, which utilizes the randomization of Scanlan's torsional flutter instability criterion (e.g., (Scanlan and Jones, 1990)) has been recently presented (Mannini and Bartoli, 2012).

2.0 FLUTTER ANALYSIS: BACKGROUND

The formulation of aeroelastic forces, employed in the study of torsional flutter, requires the use of the aeroelastic (motion-induced) overturning moment per unit length of the deck (Figure 1) as (e.g., Jones and Scanlan, 2001):

$$M_{ae} \cong \frac{1}{2}\rho U^2 B^2 \left[K A_2^* \frac{B\dot{\alpha}}{U} + K^2 A_3^* \alpha \right]. \qquad (1)$$

where B is the bridge deck width, U is the mean wind velocity, ρ is the air density, α represents pitching motion components and $\dot{\alpha}$ is a time derivative. In Eq. (1) the effects of the heaving motion (h) and corresponding lift forces are neglected, due to the secondary influence on torsional flutter. Other force and displacement components can be usually neglected if the mode shape of the fundamental torsional deck mode, involved in the vibration, is primarily torsional with negligible influence of h and p components; for a more detailed discussion, the reader may refer, for example, to (Katsuchi et al., 1999).

The torsional flutter derivatives in Eq. (1), A_2^* and A_3^*, are a function of the reduced frequency $K = \omega B/U$ where $\omega = 2\pi n$ is the circular vibration frequency of vibration of the deck; this quantity is proportional to the reciprocal of the reduced velocity $U_R = 2\pi/K$.

The coupled-mode flutter problem (heaving and torsion modes) can be usually solved by means of an aeroelastically influenced eigenvalue problem (e.g., (Scanlan and Jones, 1990)) after representing the simple harmonic motion for both modes in terms of a critical reduced frequency ratio $\chi = K/K_{t1}$,with "t_1" denoting the reduced frequency of the torsional mode. Flutter condition is found from the nontrivial solutions of a complex algebraic system of two equations $\mathbf{E}(K,\chi)\bar{\xi} = \mathbf{0}$ (Jones and Scanlan, 2001). In the case of torsional flutter, dominated by mode "t_1", the flutter analysis can be reduced to the study of the term $E_{2,2}$ of the matrix $\mathbf{E}$. This term is:

$$E_{2,2}(K,\chi) = \begin{bmatrix} -\chi^2 + 1 - q_{t1}\chi^2 A_3^*(K) G_{t1,t1} \\ +i\left(2\zeta_{t1}\chi - q_{t1}\chi^2 A_2^*(K) G_{t1,t1}\right) \end{bmatrix}. \qquad (2)$$

In the previous equation $i = \sqrt{-1}$, ζ_{t1} is the modal damping ratio of mode "$t1$" and $G_{t1,t1}$ is the modal integral of the α component of the purely torsional deck mode. Torsional flutter is determined from the vanishing of the real and imaginary parts of $E_{2,2}$ (e.g., Jones and Scanlan, 1990):

$$\lambda_{t,I} = 2\zeta_{t1}\kappa_t - q_{t1}A_2^*(K)G_{t1,t1} = 0, \quad (3a)$$

$$\kappa_t^2 = \chi^{-2} = (K_{t1}/K)^2 = 1 + q_{t1}A_3^*(K)G_{t1,t1}. \quad (3b)$$

The expression (3a), denoted as $\lambda_{t,I} = 0$, depends on K and is equivalent to a condition of zero damping. The quantity κ_t in Eq. (3a) is the inverse of the (squared) "reduced frequency ratio", which must be determined from Eq. (3b). Torsional flutter velocity is found by inspecting the roots of Eq. (3a), $\lambda_{t,I} = 0$, after substitution of Eq. (3b). The largest of the roots in $\lambda_{t,I} = 0$ is the critical reduced frequency K_{cr}, from which the critical speed U_{cr} is found as $U_{cr} = \kappa_{t,cr}^{-1}\omega_{t1}B/K_{cr}$ with $\kappa_{t,cr} = K_{t1}/K_{cr}$.

Two second-order polynomial curves ("model curves") for A_2^* and A_3^* as a function of U_R was proposed to model the behavior of flutter derivatives (Seo and Caracoglia, 2012). These are:

$$A_3^*(U_R) = C_1U_R^2 + C_2U_R, \quad (4a,4b)$$
$$A_2^*(U_R) = C_3U_R^2 + C_4U_R.$$

where $C_1,\ldots,C_4$ are four coefficients of the model, determined from the experimental data (Seo and Caracoglia, 2012).

Equations (4a-4b) allow for the derivation of a simplified expression for Eq. (3a), which does not require "point-by-point" inspection of the data for A_2^* and A_3^*. If Eqs. (4) are used, the flutter problem is reduced to finding the roots of

$$\lambda_{t,I} = 2\zeta_{t1}\left[1 + q_{t1}\left(C_1U_R^2 + C_2U_R\right)G_{t1,t1}\right]^{0.5} - q_{t1}\left(C_3U_R^2 + C_4U_R\right)G_{t1,t1} \quad (5)$$

The previous equation can be written in a compact form as

$$\lambda_{t,I} = b_1U_R^4 + b_2U_R^3 + b_3U_R^2 + b_4U_R + b_5. \quad (6)$$

The constant parameters b_1 to b_5 are independent of U_R and are related to $C_1,\ldots,C_4$ from Eqs. (4a) and (4b):

$$b_1 = C_3^2, \quad (7a)$$

$$b_2 = 2C_3C_4, \quad (7b)$$

$$b_3 = C_4^2 - 4\zeta_{t1}^2C_1/q_{t1}G_{t1,t1}, \quad (7c)$$

$$b_4 = -4\zeta_{t1}^2C_2/q_{t1}G_{t1,t1}, \quad (7d)$$

$$b_5 = -4\zeta_{t1}^2/q_{t1}^2G_{t1,t1}^2. \quad (7e)$$

The reduced velocity at flutter can be directly evaluated from $\lambda_{t,I} = 0$ and Eq. (6). The smallest real root(s) of Eq. (6) is $U_{R,cr}$, the reduced critical velocity at flutter. From $U_{R,cr}$, the critical flutter velocity can be determined from $U_{cr} = \omega_{cr}BU_{R,cr}/(2\pi)$ with critical pulsation $\omega_{cr} = \omega_{t1}/\sqrt{1 + q_{t1}\left(C_1U_{R,cr}^2 + C_2U_{R,cr}\right)G_{t1,t1}}$ and with ω_{t1} being the pulsation of mode "t1".

3.0 PROBABILISTIC FLUTTER ANALYSIS

3.1. Flutter derivatives of a "closed-box rectangular deck" girder

The flutter derivatives of a rectangular prism with an aspect ratio, width (B) to depth (D), B/D= 2:1, were employed (Fig. 2). Experimental data were derived from the results of the "US-Japan Benchmark Study on Bridge Flutter Derivatives" (Sarkar et al., 2009); such quantities were measured by Iowa State University in USA using the free-vibration method (Chowdhury and Sarkar, 2003) and by the Public Works Research Institute in Japan using the forced vibration method (Sato et al., 2004)). An "error analysis" was later conducted (Seo and Caracoglia, 2012) by also including other data sets, available from literature: "Matsumoto" (Matsumoto, 1996) and "Washizu" (Washizu et al., 1980). In all the tests, a section model undergoing 1DOF torsional vibration was used; the oscillation amplitude in wind tunnel was also the same (about 0.03 rad).

In Fig. 2(a), the A_2^* flutter derivative is depicted; the polynomial model in Eq. (4b), corresponding to the "average trend", derived by data regression of the four data sets, is also shown. Similarly, Fig. 2(b) summarizes the experimental data for A_3^* along with the polynomial model in Eq. (4a). The

two curves (thick solid lines), which were based on the "average" polynomial curves, were used in the probabilistic analysis.

3.2. Randomization of the flutter-derivative model in Eqs. (4a-4b), limit-state function and TFP

The TFP of a long-span bridge due to torsional flutter was derived by considering the following limit state function ("g function"):

$$g(U_{cr}, U_{site}) = U_{cr} - U_{site}. \quad (8)$$

where U_{cr} is the critical flutter speed, estimated through Eqs. (6-7); U_{site} is the extreme-value wind speed at the bridge site (annual maxima), which was taken as always orthogonal to the bridge axis as a first approximation.

The quantity U_{cr} is a random variable since measurement errors in A_2^* and A_3^* can be projected by "randomization" of the coefficients $C_1,...,C_4$ in Eq. (4) and Eq. (6). The mean values of these coefficients coincide with the coefficients of the "average" model curves in Fig. 2, whereas the second-moments statistics were estimated from the four data sets in Fig. 2, as described in Seo and Caracoglia (2011). Since U_{cr} is a nonlinear function of $C_1,...,C_4$ (from Eq. 6) an analytical expression of the g function in a simple form was not possible.

The limit-state flutter function was implemented by considering A_2^* and A_3^* in Eqs. (4a) and (4b) as two independent random functions. Propagation of uncertainty was simulated by treating each of the coefficients in the two polynomials as random parameters with dependency between C_1 and C_2, and C_3 and C_4. The random coefficients C_1 through C_4 were treated as both normally distributed and log-normally distributed (jointly). The expectations of $C_1,\ldots,C_4$ were based on the "average" values of the model curves (thick solid lines in Fig. 2).

The flutter probability P_f can be assessed from Eq. (8) for $g \leq 0$ (Bucher, 2009). This probability was estimated by applying Monte Carlo methods (Bucher, 2009; Grigoriu, 2002) to find U_{cr} with random $C_1,\ldots,C_4$, together with the random U_{site}. A large sample of computer generated events (5×10^5) was used to estimate flutter probabilities. The same first and second order statistical moments were applied to the simulations utilizing normal and log-normal distributions for $C_1,\ldots,C_4$.

4.0 TFP RESULTS

The two case studies were derived from a set of simulated bridge examples. The first structure ("Bridge 1") was modeled after the Golden Gate Bridge in San Francisco, California (USA), with main span $\ell = 1200$ m, deck width $B = 28$ m, deck torsional inertia $I_0 = 4.4\times10^6$ kg×m^2/m (Jain et al., 1996). The torsional deck mode ("$t1$") is skew-symmetric with frequency 0.192 Hz.

The second case ("Bridge 2") was based on the structural properties of the Tsurumi Fairway Bridge, located in Japan, with $\ell = 500$ m, $B = 38$ m, $I_0 = 2.8\times10^6$ kg×m^2/m. Analyses employed the first symmetric torsional mode with frequency 0.50 Hz (Sarkar, 1992).

In order to analyze the effects of a partial correlation between C_1, C_2 and C_3, C_4, on torsional flutter a sensitivity analysis was performed by varying the coefficients of correlation (ρ_{C_1,C_2} and ρ_{C_3,C_4}) between 0 and 1.0.

Figure 3(a) shows the generalized safety index $\beta = \Phi^{-1}(1 - P_f)$ for Bridge 1 as a function of ρ_{C_3,C_4}, with Φ being the standard Gaussian cumulative density function. The histograms compare the numerical results obtained by MC methods. Both jointly Gaussian (N) and jointly log-normal (LN) parameters $C_1,\ldots,C_4$, are shown.

Figure 3(b) summarizes the results of the probability analysis for Bridge 2. As anticipated, a "bluff" deck cross-section on a shorter span bridge results in a drastic decrement in flutter probability. An increment in the safety index equal to four times or more can be observed for

both distributions of the random coefficients, for example from the comparison of Fig. 3(b) with Fig. 3(a) for jointly-Gaussian $C_1,\ldots,C_4$.

The comparison of Figs. 3(a) and 3(b) also suggests that, if a target safety index $\beta = 3.5$ was employed, Bridge 1 would be deficient, while the use of a "bluff" rectangular section for Bridge 2 would still be acceptable.

5.0 EXPECTED LIFETIME COST, BASED ON TFP

Over a time period (t, in years), which may be the design life of a new bridge or the remaining life of an existing structure, the expected total cost due to wind-induced damages can be expressed as (Wen and Kang, 2001):

$$E\left[C(t)\right] = C_0 + E\left[\sum_{i=1}^{N(t)}\sum_{j=1}^{k} C_j e^{-\lambda t_i} P_j\right]. \qquad (9)$$

where $E[]$ denotes expected value; C_0 is the initial construction cost of the structure; i is an index describing each severe loading occurrence; $t_i \le t$ is the loading occurrence time of event "i", a random variable. Moreover, $N(t)$ is the total number of wind damaging events over time t; C_j is the cost in present dollar value of j-th limit state being reached at time t_i of the loading occurrence; $e^{-\lambda ti}$ is the "discounted factor" (Wen and Kang, 2001) of C_j over time t; λ is a constant discount rate per year; P_j is the probability of occurrence for limit state j, assumed as a constant over time; the integer index k is the total number of limit states under consideration. In the case that the repair cost is exclusively affected by the flutter limit-state, Eq. (9) can be simplified using $k=j=1$ and $P_j=P_f$. The expected value of the "lifetime cost", induced by TFP, normalized with respect to the initial construction cost C_0, is

$$C_{F,E} = E\left[C(t) - C_0\right]/C_0 = E\left[\sum_{i=1}^{N(t)} e^{-\lambda t_i} P_f\right]. \qquad (10)$$

In Eq. (10) the expected relative cost $C_{F,E}$ accounts for the number of occurrences of moderate to large wind storms based on the Poisson counting Process $N(t)$ with mean occurrence rate equal to 0.01 (as an example), which has a chance of occurring once every one hundred years.

Figure 4(a) presents the influence of ρ_{C_3,C_4} on the expected lifetime relative cost for Bridge 1, t=50 years in Fig. 4. The bar charts compare the numerical results obtained by Eq. (10). In Fig. 4(a) the expected lifetime costs, calculated for both jointly Gaussian and jointly log-normal random coefficients $C_1,\ldots,C_4$, are shown. The expected cost $C_{F,E}$ is three times larger than the construction cost for most cases; this results is dictated by the large values of P_f and low β in Fig. 3(a).

Figure 4(b) summarizes the results of the cost analysis for Bridge 2. The "closed-box rectangular deck" used on a shorter span bridge results in a sensitive diminution in the expected lifetime cost. The expected cost based on TFP relative to construction cost is minimal in this case; it is less than 1.1 times the initial cost after t=50 years for all cases.

6.0 SUMMARY

This study employs some of the data of the "US - Japan Benchmark Study on Flutter Derivatives" to derive the expected lifetime relative cost, induced by wind damages due to bridge flutter on two simulated long-span bridge cases (central span length 1200 m and 500 m). Random experimental errors, associated with the measurement of the flutter derivatives in wind tunnel, were considered in the simulations.

The results of the torsional probability investigation for both bridge models, equipped with a closed-box rectangular deck girder, suggested a significant variability in the safety indices A relative difference between two to three times was noticed among the various cases.

The results of the cost analysis are preliminary. Even though the aeroelastic properties of an unrealistically bluff deck were used, it is suggested that the expected costs due wind-induced damages cannot be neglected over

time even for a relatively short-term “exposure”.

7.0 ACKNOWLEDGMENTS

Professor Partha P. Sarkar, Iowa State University, USA is gratefully acknowledged for sharing the data of the United States - Japan Benchmark Study on Flutter Derivatives.

This research was supported in part by the National Science Foundation (NSF) of the United States, Directorate for Engineering, Grant CMMI 0600575 in 2006 - 2010. Any opinions, findings, conclusions or recommendations expressed in this study are those of the authors and do not necessarily reflect the views of the NSF.

8.0 REFERENCES

Bucher, C., "Computational analysis of randomness in structural mechanics," Taylor Francis Group, London, UK, 2009.

Chowdhury, A.G., Sarkar, P.P., "A new technique for identification of eighteen flutter derivatives using a three-degree-of-freedom section model," *Engineering Structures*, 25 (12) (2003) 1763–1772.

Dragomirescu, E., Miyata, T., Yamada, H., Katsuchi, H., "Probabilistic approach of structural reliability applied to bridge components," *Proceedings of the 11th International Conference on Wind Engineering (11-ICWE)*, Texas Tech University, Lubbock, Texas, USA (2003) 789-796.

Grigoriu, M., "Stochastic calculus. Applications in Science and Engineering," Birkhäuser, Boston, MA, USA, 2002.

Jain, A., Jones, N.P., Scanlan, R.H., "Coupled aeroelastic and aerodynamic response analysis of long-span bridges," *Journal of Wind Engineering and Industrial Aerodyn.*, 60 (1-3) (1996) 69-80.

Katsuchi, H., Jones, N.P., Scanlan, R.H., "Multimode coupled buffeting and flutter analysis of the Akashi-Kaikyo Bridge," *Journal of Structural Engr., ASCE*, 120 (8) (1999) 60-70.

Mannini, C., Bartoli, G., "Propagazione dell’incertezza dai coefficienti aeroelastici alla velcocità critica di flutter di un ponte," *Proceedings of the Proceedings of the Twelfth Italian Conference on Wind Engineering*, Venice, Italy (2012).

Matsumoto, M., "Aerodynamic damping of prisms," *Journal of Wind Engineering and Industrial Aerodyn.*, 59 (2-3) (1996) 159-175.

Sarkar, P., Caracoglia, L., Haan, F.L., Sato, H., Murakoshi, J., "Comparative and sensitivity study of flutter derivatives of selected bridge deck sections. Part 1: Analysis of inter-laboratory experimental data," *Engineering Structures*, 31 (1) (2009) 158-169.

Sarkar, P.P., "New identification methods applied to the response of flexible bridges to wind," PhD Dissertation, Johns Hopkins University, Baltimore, MD, USA, 1992.

Sato, H., Murakoshi, J., Fumoto, K., "Benchmark Study on flutter derivatives - Measurements at PWRI, Japan," Research Report, Structures Research Group, Public Works Research Institute, Tsukuba, Japan, 2004.

Scanlan, R.H., Jones, N.P., "Aeroelastic analysis of cable-stayed bridges," *Journal of structural Engineering, ASCE*, 116 (2) (1990) 279-297.

Scanlan, R.H., Tomko, J.J., "Airfoil and bridge deck flutter derivatives," *Journal of Engineering Mechanics, ASCE*, 97 (EM6) (1971) 1717-1737.

Seo, D.-W., Caracoglia, L., "Estimation of torsional-flutter probability in flexible bridges considering randomness in flutter derivatives," *Engineering Struct.*, 33 (8) (2011) 2284-2296.

Seo, D.-W., Caracoglia, L., "Statistical buffeting response of flexible bridges influenced by errors in aeroelastic loading estimation," *Journal of Wind Engineering and Industrial Aerodynamics*, 104–106 (0) (2012) 129-140.

Washizu, K., Ohya, A., Otsuki, Y., Fujii, K., "Aeroelastic instability of rectangular cylinders in a torsional mode due to a transverse wind," *J. of Sound and Vibration*, 72 (4) (1980) 507-521.

Wen, Y.K., Kang, Y.J., "Minimum building life-cycle cost design criteria. I: Methodology," *Journal of Structural Engineering*, 127 (3) (2001) 330-337.

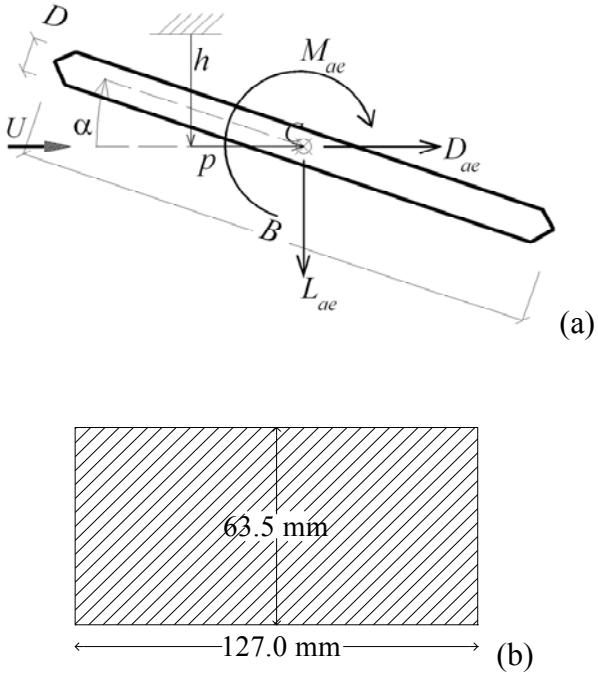

Figure 1: (a) Description of degrees of freedom and aeroelastic forces on a bridge deck (*p* and *h* component neglected); (b) rectangular box section ("closed-box rectangular deck") with $B/D = 2:1$ used by the US-Japan Benchmark Study on Flutter Derivatives (measurements refer to the section-model tested at Iowa State University).

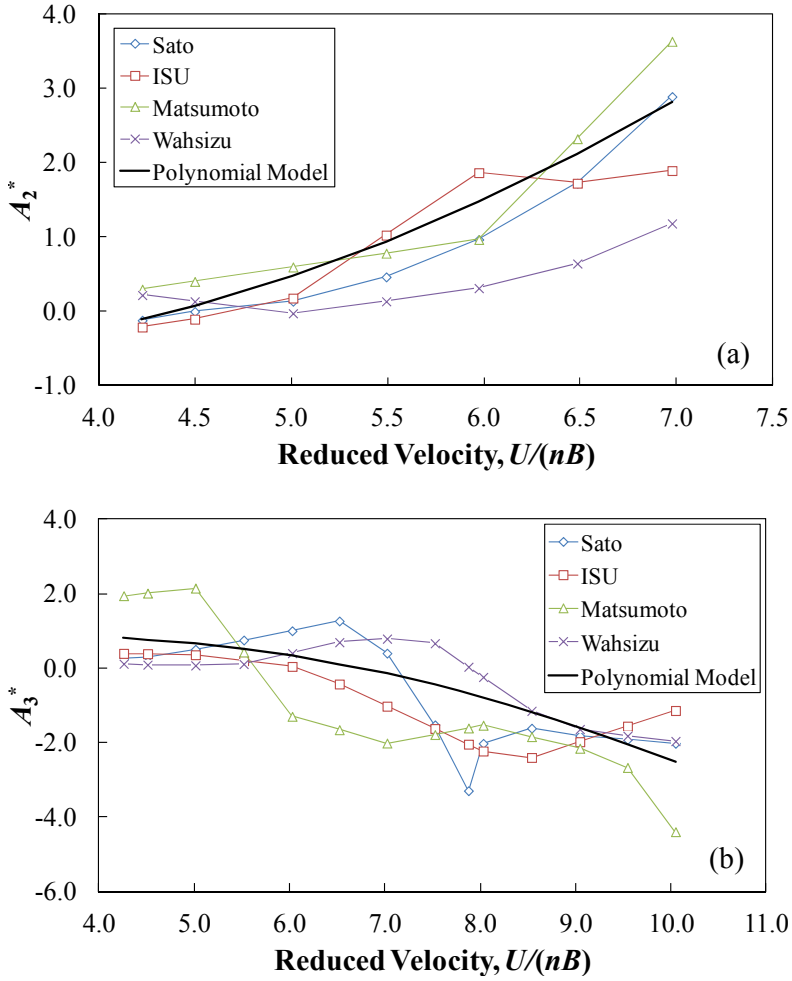

Figure 2: (a) Flutter derivatives A_2^* (a) and A_3^* (b) of the closed-box rectangular deck with aspect ratio $B/D = 2:1$, employed in torsional flutter analyses. The four data sets labeled as "Sato", "ISU", "Matsumoto" and "Washizu" were reproduced from (Sarkar et al., 2009). The "Polynomial Model" was derived by regression of the four data sets.

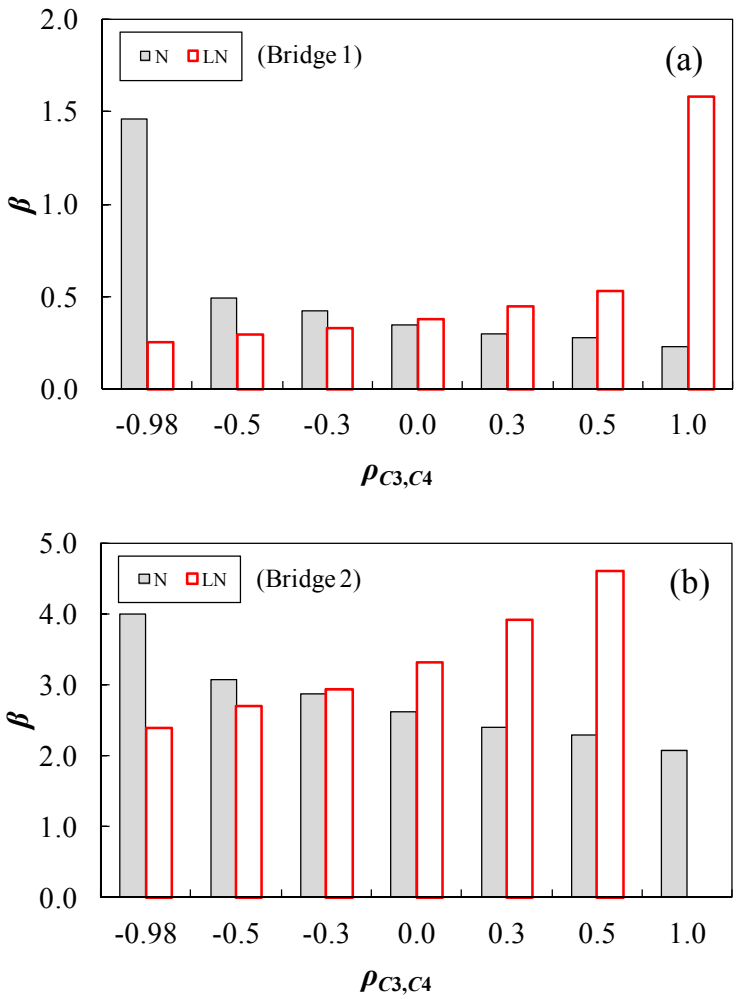

Figure 3: Safety indices β for closed-box rectangular deck (FD in Fig. 2) for jointly-Gaussian (N) and log-normal (LN) random coefficients $C_1,\ldots,C_4$, as a function of the ρ_{C_3,C_4} correlation coefficient: (a) Bridge 1; (b) Bridge 2.

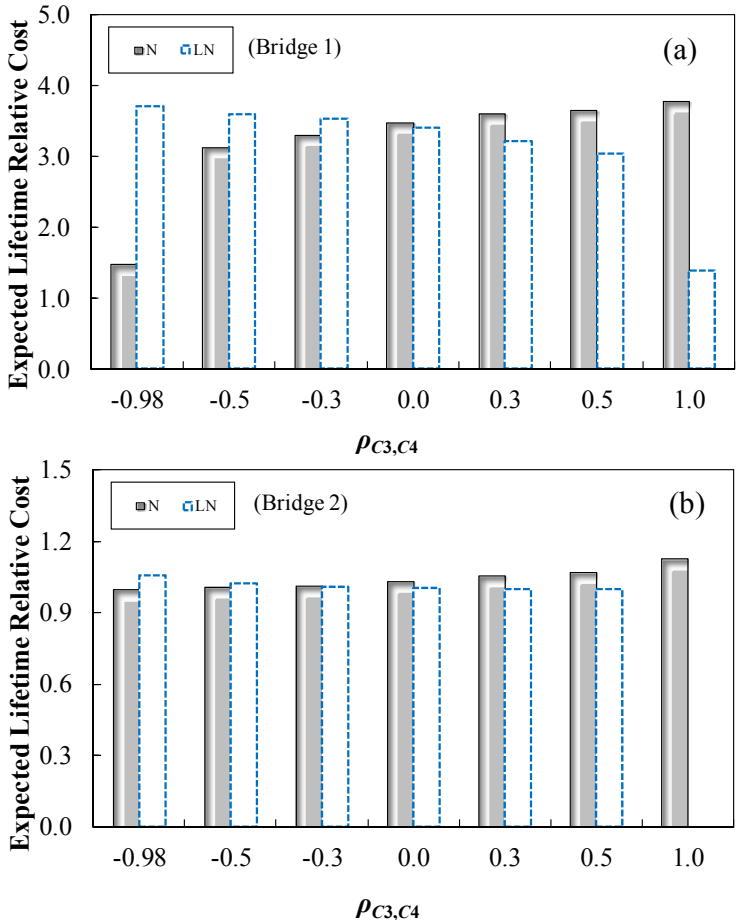

Figure 4: Expected lifetime relative cost after 50 years due to torsional-flutter probability damage, for jointly-normal (N) and jointly-log-normal (LN) random coefficients $C_1,\ldots,C_4$, as a function of the ρ_{C_3,C_4} correlation coefficient: (a) Bridge 1; (b) Bridge 2.